REVISIONS LIST				
REV	ECO #	DESCRIPTION	DATE	APV'D
A		Initial Release		

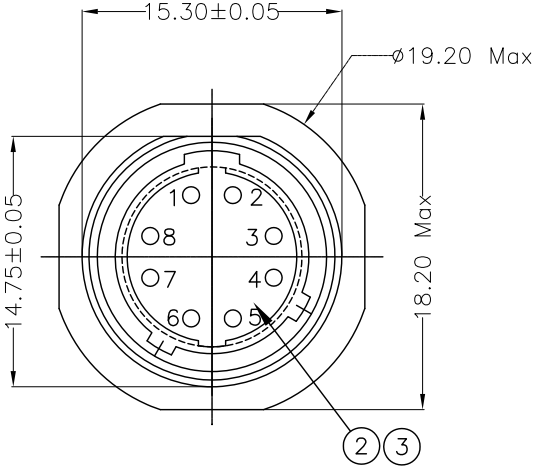

Insert Shown as Pin Arrangement

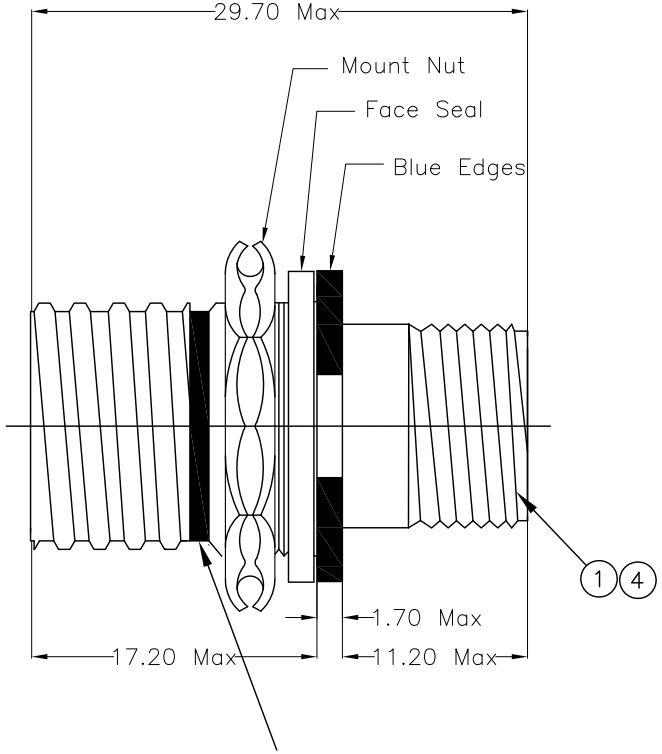

Fully Mated Indicator Band – Red

SPECIFICATIONS

MECHANICAL

Endurance:	250 Mating Cycles
Contact Retention:	44 N (Min)
Insert Retention:	110 N
Vibration (Sine):	10 to 2000 Hz, 20g
Vibration (Random):	40 to 2000 Hz, 46.3g
Mechanical Shock:	300g , 3ms

ELECTRICAL

Dielectric Withstanding Voltage:	1000 Vrms/ 500Vrms @ 70,000 ft
Current Rating:	3 Amp/contact
Insulation Resistance:	500MΩ @ 500 Vdc

ENVIRONMENTAL

Operating Temp:	–55°C TO + 150°C
Sealing:	70,000 ft altitude immersion IP67 (mated)
Salt Spray:	96 hr (Olive Drab Cadmium) 48 hr (Electroless Nickel) 48 hr (Zinc Black)

FUNCTIONAL PARAMETERS

Achieves Gigabit Speed with Cat 6a or Cat 7 wire
Maximum panel thickness is 1.5mm

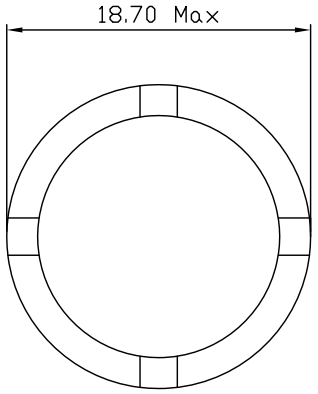

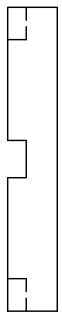

Optional Close Fit Mount Nut

No.	Name	Material	Finish
1	Shell	Aluminum	Nickle Underplate
2	Insert	Engineering Plastic	Natural
3	Contact	Copper Alloy	2.54µm Ni – 1.27µm Au
4	Gaskets, Grommet & Interface Seals	Silicone or Flurosilicone Elastomer	Natural

UNLESS NOTED TOLERANCES ARE:
.X ± 0.38
.XX ± 0.25
ANGLES ± 1°

THIRD ANGLE PROJECTION

SPI CONNECTS
1170 S. PATTON ST.
XENIA, OHIO 45385
PH: (937) 374–2700
FX: (937) 374–2717

UNIT: mm	DRWN: RLM	THESE DRAWINGS AND SPECIFICATIONS ARE THE PROPERTY OF SPI AND SHALL NOT BE COPIED, USED OR RE–PRODUCED WITHOUT PERMISSION.	TITLE: NanoCat Jam Nut Receptacle
SCALE: NTS	DATE: 10/25/16		
	CHK'D: RLM		SPI P/N: SPI3874XCATXXXX REV: A
SHEET: 1 OF 1	APV'D: RLM		CUSTOMER P/N: